MINISTRY OF EDUCATION AND TRAINING

THE UNIVERSITY OF DANANG

LE XUAN THACH

A STUDY ON THE FUEL SYSTEM AND COMBUSTION PROCESS OF HIGH COMPRESSION RATIO SPARK IGNITION ENGINE USING BIOGAS

Specialty: Heat Engine Engineering

Code: 62.52.34.01

ABSTRACT OF TECHNICAL THESIS

Danang – 2013

The work has finished at

THE UNIVERSITY OF DANANG

The first scientific advisor: **Assoc.Prof.Dr. Tran Van Nam**

The second scientific advisor: **Prof.Dr.Sc. Bui Van Ga**

The first reviewer: **Prof.Dr.Sc. Pham Van Lang**

The second reviewer: **Assoc.Prof.Dr. Nguyen Huu Huong**

The third reviewer: **Assoc.Prof.Dr. Tran Thanh Hai Tung**

The thesis is going to be defended at the Council for Evaluation PhD thesis Technical meeting at the the university of DaNang on 28/12/2013

This thesis can be lookup at the university of DaNang:

- The Learning Resource and Infomation Centre
- The Learning Resource Centre

INTRODUCTION

1. THE URGENCY OF THE RESEACH

The solution that uses biogas as a fuel for internal combustion engines achieves all three goals: saving fossil fuels, limiting emissions of greenhouse gases and protecting the environment in the production and living environment.

In Vietnam, the engine which uses biogas as a fuel can be the biogas engines imported full pack from oversea with high cost, or can be the biogas engines adjusted from gasoline engines or diesel engines with lower cost. The reason for using these biogas engines adjusted in the first stage it significantly brings about economical and environmental pollution. However, when the need to use biogas as a fuel for internal combustion engines in a high demand. In addition, the inconsistency of biogas components with a variety of types and sizes of engines to be converted. Therefore, it is necessary to do further reasearch to optimize the fuel supply systems, to study combustion of biogas engines and to determine the basic parameters ensuring the engine performance.

In addition, the use of biogas in the rural production is so essential for energy safe strategy in Vietnam. The solution that converts from a traditional diesel engine to a spark ignition biogas engine take advantages of low speed and high compression ratio of the diesel engines to improve the capacity of the engine with biogas. On the other hand, in the operation the biogas engine does not use liquid fuel to spray primer that lead to economic efficiency.

Therefore, "**A study on the fuel system and combustion process of high compression ratio spark ignition engine using biogas**" is in the importance of science and practice.

2. STUDY OBJECTIVES OF THE THESIS

- To propose a process of converting a diesel engine to a spark ignition biogas engine.
- To design, manufacture a biogas-air mixture for the spark ignition biogas engine.
- To determine the compression ratio and optimal advance timing ignition angle of the spark ignition biogas engine converted from diesel engines by model and experiment.

3. RESEARCH LIMITED

This study is carried out on the single cylinder spark ignition engine whose compression ratio can be changed.

Limitations of the study: To design and manufacture a fuel system and to study on combustion of the biogas engine. Since then to determine the optimal parameters of biogas engines modified from diesel engine by simulations and experiments.

4. METHODOLOGY

To combine three methods: Theory Research, Simulation and Experimental Testing to obtain the reliability of research results.

Theory Research:

- Using FLUENT software to simulate flow through mixing device to determine its optimal basic size with biogas containing different concentrations of CH_4.
- Simulating combustion process of biogas engine while changing the parameters such as compression ratio, advance ignition timing angle, type of combustion chamber and fuel component via the fluid dynamic software FLUENT.

Experiment:

- Designing and manufacturing spare parts that served to adjust a single cylinder diesel engine to a spark ignition biogas engine.

- Manufacturing the biogas fuel system.
- Doing experiments on the Froude dynamometer to access influence of biogas composition, compression ratio and advanced ignition timing angle on the outer characteristic lines of the ZH1115 engine.

5. THE TITLE OF DISSERTATION

A study on the fuel system and combustion process of high compression ratio spark ignition engine using biogas

6. SCIENCE AND PRACTICE CONTRIBUTION OF THE RESEARCH

The research is to optimize the fuel system and to study on combustion of the biogas engine. Since then to determine the optimal basic parameters of high compression biogas engines modified from diesel engine by models and experiments.

The research results will be applied on the manufacture of biogas engines with high capacity serving for the agricultural sector in Vietnam.

7. STRUCTURE OF CONTENTS THESIS

Includes an introduction, five chapters, and the conclusion.

Chapter 1
OVERVIEW

1.1. Production and application of biogas in the world and in Vietnam

The rising of biogas generating sources in both scale and quantity leads to the demand of the spot-biogas sources for running the generator in order to save the energy cost.

1.2. Using biogas as a fuel for internal combustion engines

The basic biogas contains CH_4, CO_2 and some other impurities such as H_2S, siloxanes. Depending on the equipment, the filtration of the impurities can be carried out in different levels. In most of low capacity systems, the removal of CO_2 might be not necessary. The

filtration of H_2S can be carried out by supplying biogas through filtering chamber which contains rust of iron or diatomite.

1.3. Biogas engines

In Vietnam, the engine which uses biogas as a fuel can be the biogas engines imported full pack from oversea with high cost, or can be the biogas engines adjusted from gasoline engines or diesel engines with lower cost.

1.4. The research on the use of biogas as a fuel for SI engines

There have been some studies used biogas as a fuel for the spark igniton engines. The studies focus on the biogas composition, compression ratio, advanced ignition timing angle, prechamber spark plug and emission.

1.5. Effectiveness of the environment protection by the use of biogas as a fuel

When using biogas as a fuel for the internal combustion engines the CO_2 emission level is almost zero.

1.6. Conclusion and recomendation of the research

The solution that uses biogas as a fuel for internal combustion engines achieves all 3 goals: saving fossil fuels, limiting emissions of greenhouse gases and protecting the environment in the production and living environment.

The biogas spark ignition engine converted from diesel engine has some advantages as follow: robust structure, high compression ratio, no need liquid fuel for operation.

In Vietnam, although biogas can be used as a fuel for the engines converted from gasoline engines to dual fuel biogas/gasoline or from diesel engines to dual fuel biogas/diesel, it is still necessary to do further reasearch to optimize the fuel supply systems, to study

combustion of biogas engines and to determine the basic parameters ensuring the engine performance.

Therefore "**A study on the fuel system and combustion process of high compression ratio spark ignition engine using biogas**" is in the importance of science and practice in the world and Vietnam.

Chapter 2
MODIFICATION OF CYLINDER DIESEL ENGINE TO SPARK ENGINE

2.1. The liquid fuel engine conversion solutions to the biogas engines

The gasoline engines are easily be converted into biogas-gasoline dual fuel engines. However, when operated by biogas the capacity of the engines is lower than operated by gasoline.

The diesel engines are be converted into biogas engine in either ways: biogas-diesel dual fuel engines and spark ignition engines.

2.2. Modification of diesel engine to spark ignition engine

Some main modification are removal of diesel fuel system; reduction of compression ratio to $\varepsilon = 12$; installation of spark ignition system and fuel/air mixing device with optimal concentration; installation or adjustment of the governor to driven a throttle.

2.3. Conclusion

CO_2-containing biogas fuel reduces the burning rate of the fuel/air mixture but also makes the mixture becoming high antidetonation. This show that the use of biogas as a fuel on spark ignition engines converted from a diesel engine is appropriate choice.

Some main modification are removal of diesel fuel system; reduction of compression ratio to $\varepsilon = 12$; installation of spark ignition system and fuel/air mixing device with optimal concentration; installation or adjustment of the governor to driven a throttle.

In the present, these conversion can be fully carried out. However, when the need to use biogas as a fuel for internal combustion engines in a high demand. In addition, the inconsistency of biogas components with a variety of types and sizes of engines to be converted. Therefore, it is necessary to do further reasearch to optimize the fuel supply systems, to study combustion of biogas engines and to determine the basic parameters ensuring the engine performance.

Chapter 3

SIMULATION OF FLOW THROUGH MIXING DEVICE AND COMBUSTION OF SPARK IGNITION ENGINE USING BIOGAS

In order to have a general assessment and orientation in designing and manufacturing of assemblies served in conversion from a ZH1115 diesel engine to a spark ignition engine and also it is required to have basis for comparison with the results of the experiment, this chapter presents the theory and the results of simulation of the flow through the mixture device as well as the biogas-air mixture combustion by CFD FLUENT software.

3.1. CFD FLUENT software

CFD Fluent software contains the broad physical modeling capabilities needed to model flow, turbulence, heat transfer. Special models that give the software the ability to model fuel supplying system and burning of internal combustion engine with high reliability.

3.2. Theory of turbulent flow

In the field of the internal combustion engine, a flow of the gas mixture in the intake manifold and the movement of the fluid in the cylinder are turbulent flows. The most important model used to close the system of equations turbulent is k-ε model.

3.3. Theory of gas fuel combustion

A detailed analysis of combustion process must be done by solving the equations in which two basic variables are mixture fraction f, and the reaction progress variable c.

3.4. Theory of premixed combustion

This part includes an overview of premixed combustion, theories about the propagation of flame, the calculation of the laminar burning velocity and the turbulent burning velocity, the introduction of the premixed combustion model used in FLUENT software and the methods to figure out the temperature and the density.

3.5. Theory of partially premixed combustion

3.5.1. Overview

The partially premixed model in ANSYS FLUENT is a combination of the non-premixed model and the premixed model. The premixed reaction-progress variable, c, determines the position of the flame front. Behind the flame front (c=1), the mixture is burnt and the equilibrium or laminar flamelet mixture fraction solution is used. Ahead of the flame front (c=0), the species mass fractions, temperature, and density are calculated from the mixed but unburnt mixture fraction. Within the flame ($0<c<1$), a linear combination of the unburnt and burnt mixtures is used.

3.5.2. The calculation of the quantities

Density weighted mean scalars (such as species fractions and temperature), denoted by $\overline{\phi}$, are calculated from the probability density function (PDF) of f and c.

3.5.3. The laminar burning velocity

The premixed models require the laminar flame speed, which depends strongly on the composition, temperature, and pressure of the unburnt mixture. Accurate laminar flame speeds are difficult to

determine analytically, and are usually measured from experiments or computed from 1D simulations.

3.6. Simulation flow through mixing device by FLUENT software

3.6.1. Installing the models

The mixture device used for a spark ignition biogas engine converted from a ZH1115 diesel engine, Mixer_ZH1115, has depicted in Fig. 3.9. The FLUENT software is used to simulate the Mixer_ZH1115 aiming to check the supplying characteristics and to determine the equivalent diameter of the supplying pipe when working with biogas fuels of different CH_4 volume.

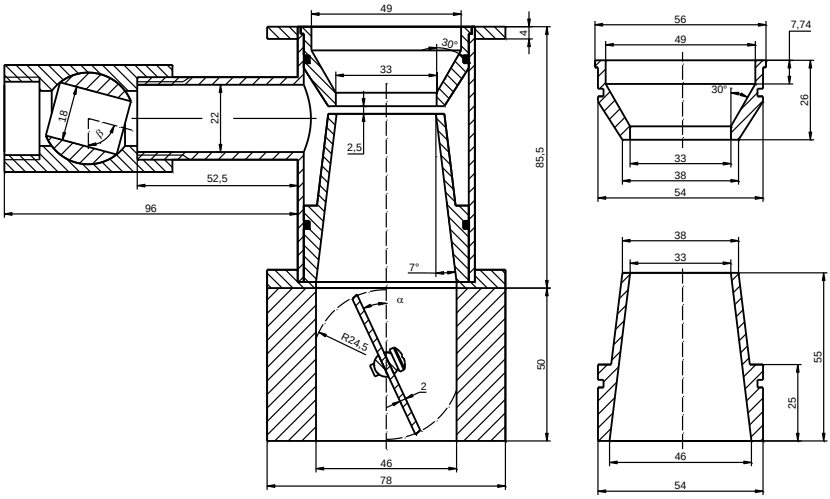

Fig. 3.9. The Mixer_ZH1115

3.6.2. The simulation results

The calculation results show that when the engine operates on the engine performance curves (with the throttle valve being 100% open), ϕ of the mixture is almost stable (ϕ changes from 1.03 to 1.04). When the engine operates on the local performance curves, the curve of the fuel-air equivalence ratio changes in accordance with the engine speed:

the steeper the engine speed is, the smaller the throttle valve opening level becomes. The change in concentrations at high-speed positions is less than at low-speed positions. At any opening levels of the throttle valve, when the engine works at the rated speed between 1,800 rpm and 2,200 rpm, the fuel-air equivalence ratio of the mixture change in a narrow range from 1.02 to 1.10.

When the opening levels of the biogas valve and the throttle valve are given, the fuel-air equivalence ratio ϕ of the mixture are slightly reduced together with the speed of the engine. The bigger the opening level of the throttle valve is, the lower the changing degree of ϕ becomes. When biogas is changed, we can adjust the biogas ball valve to achieve the best mixed components. This adjustment can be made once for one kind of fuel.

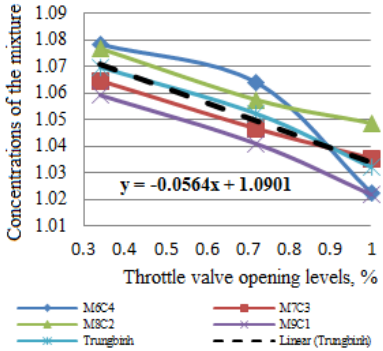

Fig. 3.15. Change in mixture concentrations in accordance with throttle valve opening levels

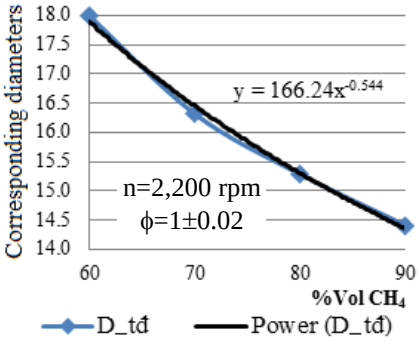

Hình 3.16. Relationships between the corresponding diameters of the biogas supplying pipe and the amount of CH_4 of the fuel

The results show that while the speed of the engine and the position of the biogas ball valve are fixed, the concentrations of the mixture are reduced when the opening levels of the throttle valve increases. When the throttle valve is fully open, the concentrations of

the mixture are almost unaffected by the engine speed.

Thanks to the adjustment of the ball valve showed in Fig. 3.15, diameters of the biogas supplying pipe in accordance with the concentration of CH_4 in the fuel, with the mixer for the ZH1115 engine are determined as in Fig. 3.16.

3.7. Simulation combusion process FLUENT software

3.7.1. Installing the models

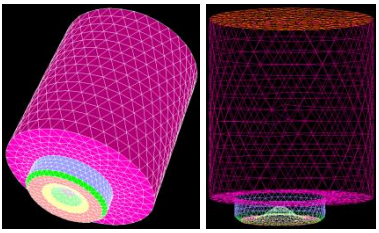

Fig. 3.15. The Omega chamber

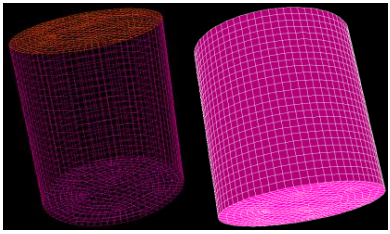

Fig. 3.16. The flat chamber

This research has been made on the biogas spark ignition engine converted from the ZH1115 diesel engine made by JIANGDONG (China). The ZH1115 engine has compression ratios in proportion to 17 and 24 hp at the speed of 2,200 rpm when it is powered by diesel.

Establishing of computational models for the two types of combustion chambers (Omega and flat), meshing and setting boundary conditions for the problem to be implemented in GAMBIT software. Applying Dynamic Mesh allows to install of the engine structural parameters before performing calculations with CFD FLUENT software.

In this calculation, the k-ε turbulence model and partially premixed combustion model are used. The thermodynamic parameters corresponding to the mixture components are established in the form of pdf. table to save the computating time. The concentrate of the mixture is adjusted through the mixture fraction, f.

3.7.2. The combusion of biogas/air mixture

The results show that the flame front is in the form of sphere, propagating from the ignition location to the furthest regions of the combustion chamber. At the end of the burning process, there is a part of mixture locating on far-off axis of the combustion chamber still unburned (Figure 3.27). However, due to the strong swirly movement of the mixture in the combustion chamber leading to the flame front propagates very quickly.

When doing some calculation for the flat combustion chamber, although it is assumed that the location of the spark plug was placed on the top of the combustion chamber in symmetry, the combustion

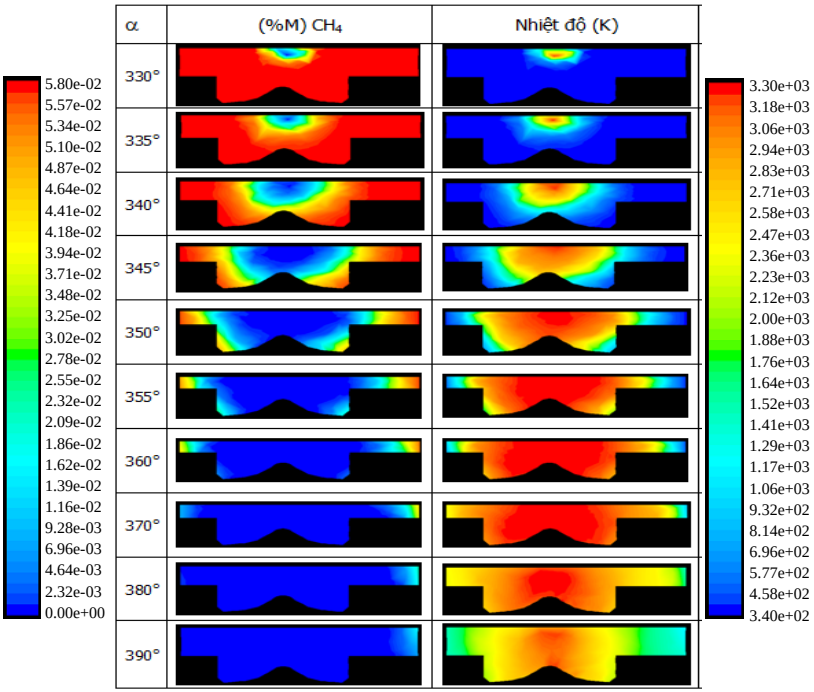

Fig. 3.27. Evolution of CH_4 concentration and temperature of biogas combustion in the SI engine with Omega chamber
(ε=11,63; n=1500v/ph; φ_s=50°; ϕ=1,08; biogas contains 70% CH_4)

takes place slowly because the mixture is not swirled. Therefore, at the end of the combustion, the mixture which is near the cylinder head is still unburnt.

The initial results suggest that it had better to utilize the available swirl in the original diesel engine to speed up the burning velocity when running with biogas.

3.7.3. The influence of types of chambers

The results showed that the mixture consumption rate of the engine

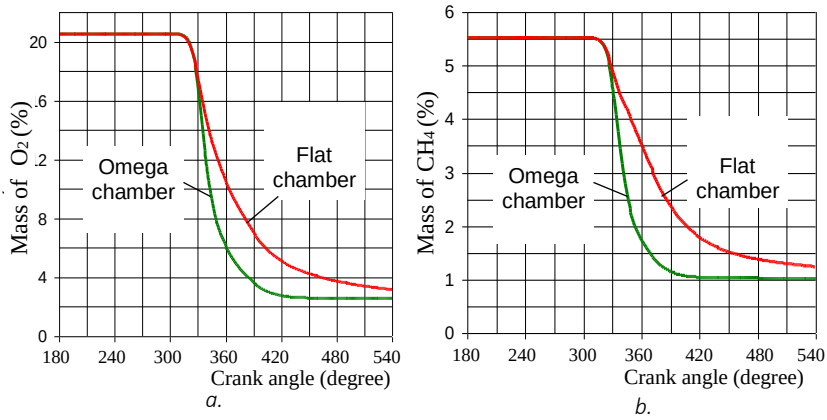

Fig. 3.30. Effect of combustion chamber shape to varying concentrations of O_2 (a) and CH_4 (b) on the combustion of biogas spark ingnition engine (ε=11,63; n=2200 rpm; φ_s=50°; ϕ=1,08; biogas contains 60% CH4)

with omega combustion chamber is significantly higher than that of the engine with flat combustion chamber (Fig. 3.30). This makes to a high heat rate in omega combustion chamber leading to the maximum temperature of the gas in the combustion chamber temperature greater than the maximum temperature in the flat combustion chamber. In contrast, the flame front propagates at low-speed so that the combustion happens in the expansion process causes the emissions temperature increased, compared with the case of omega combustion chamber. In the

above operating conditions and with the mixture concentration $\phi = 1.08$, the maximum temperature of the gas in the omega combustion chamber is greater than the maximum temperature in the flat combustion chamber for about 350K, but emission temperature is lower, about 100K.

In the same operating conditions that biogas contains 70% CH4 in volumne at the engine speed of 2200rpm, the maximum indicated pressure in the omega combustion chamber is higher than that of the flat combustion chamber for about 20bar. The cycle indicated capacity decreases by 22% when switching from the omega combustion chamber to flat combustion chamber.

3.7.4. The influence of the compression ratio

In the case of biogas engines ZH1115 run at the speed of 2,200 rpm and the advanced ignition timing angle 40° BTDC, optimal compression ratio in the range from 11.5 to 12.5.

3.7.5. The influence of the advanced ignition timing angle

The results present that the higher the advanced ignition timing angle, the higher the maximum indicated pressure and the nearer the peak of the pressure curve moves forward to the left. The changing rule is similar for biogas with different CH_4 volume.

When the engine runs at the speed of 2200rpm, the indicated capacity reaches the maximum value coresponding with advanced ignition timing angle 40^0 BTDC. When the engine runs at the fixed speed, the optimal advanced ignition timing angle tends to decrease if the CH_4 concentration in biogas increases.

3.7.6. The influence of the biogas component

Assessing the impact of biogas component on the engine's operation in two cases:

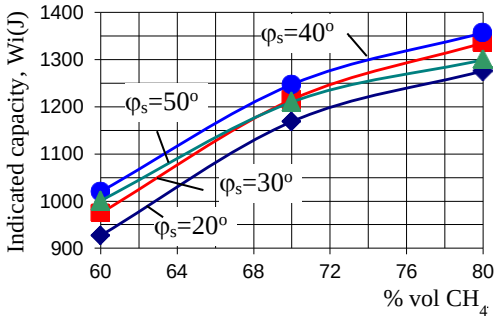

Fig. 3.43. Variation of the cycle indicated capacity components CH_4 in biogas in accordance with different advanced ignition timing angle (ε=11,63; n=2200 rpm)

3.7.6.1. Fixed biogas/air rate

With variable advanced ignition timing angle, the indicated capacity increases in accordance with the CH_4 in the biogas. The indicated capacity increases rapidly in the early stage but slowly at the late time (Fig. 3.43).

3.7.6.2. Fixed CH_4/O_2 rate

The results indicate that with the same concentration, if the CH_4 volumne in the biogas increases, the mixture consumption rate increase greatly and the fuels burning completely leading to the unburnt CH_4 of the emission reduce.

3.7.7. The influence of the mixture concentration

The variation of the indicated capacity in relation to the mixture concentration ϕ presents that the indicated capacity reaches the maximum value if ϕ is appropximate 1.

3.8. Conclusion

- It is possible to use FLUENT software to simulate the flow through the mixture device as well as the biogas-air mixture combustion. This allows to reduce the complex tests for designing the mixture and to study the factors affecting the combustion of this engine.

- The venturi mixing device can supply stable mixture for biogas engines. When cross section of biogas supplying pipe is fixed, variation

of mixture composition is not considerable with change in the throttle opening and engine speed. When CH_4 composition in biogas fuel changes, cross section of biogas supplying pipe should be changed.

- For ZH1115 biogas engine with original air supply pipe, the equivalent diameter of biogas supplying pipe can be represented by the expression $D(mm)=166.X^{-0.5443}$, where X is the percentage (%) of CH_4 in biogas by volume.

- Due to burning velocity of biogas-air mixture is lower than diesel case, we should maintain turbulent movement of flow in combustion chamber and increase the advance ignition timing angle for improving the efficiency of the engine.

- Simulation results show that indicating work of ZH1115 biogas engine with flat piston is lower than that of omega combustion chamber about 22% when running at speed of 2,200 rpm.

- In the case of biogas engines ZH1115 run at the speed of 2200 rpm and the advanced ignition timing angle 40° BTDC, optimal compression ratio in the range from 11.5 to 12.5.

Chapter 4

DESIGNING AND MANUFACTURING SPARE PARTS THAT SERVED TO ADJUST DIESEL ENGINE ZH1115 TO A SPARK IGNITION BIOGAS ENGINE

Some main modification are removal of diesel fuel system; reduction of compression ratio to $\varepsilon=12$; installation of spark ignition system and fuel/air mixing device with optimal concentration; installation or adjustment of the governor to driven a throttle.

4.1. The diesel ZH1115

The single cylinder engine ZH1115 has compression ratio 17 and maximum capacity 24hp at the speed of 2,200rpm when it is

powered by diesel. This kind of ZH1115 engine is very common in Vietnam.

4.2. To reduced the compression ratio

Compression ratio of the engine is reduced to ε=12 by cutting off the piston head by 4.71mm in thickness.

4.3. To install the spark ignition system

The DC-CDI electronic ignition system includes a 12V battery, a ignition coil, a high tension lead, an IC and a spark plug.

4.4. To design and to make fuel/air mixing device

The biogas/air mixture is supplied to the biogas engine through the venturie mixture device. A ball valve is mounted on the biogas supplying pipe. Basing on the main dimensions figured out, and the results from the above simulation, we make the mixture device with sizes showed in Fig. 3.9.

4.5. Adjustment of the governor to driven a throttle

Utilizing the original goveror of the diesel engine ZH1115 to drive the throttle of the biogas/air mixture (Fig. 4.12)

4.6. The process of converting a diesel engine to a spark ignition biogas engine

4.7. Conclusion

The reseacher has established the complete adjusted process and modified successfully from the single cylinder diesel engine ZH1115 to a biogas spark ignition engine with high compresion ratio.

Also, the reseacher has converted two diesel engines: the single cylinder engine D28 Samdi and the six-cylinder engine 6D22 Mitsubishi which are used for driving the generators as planed.

To prolong lifetime of the biogas engine, it is required that the users have to follow the operation maintenance procedure. In

particular, it should be ensured the stable operation of the biogas filter, the appropriate lubricants and periodical lubricant replacement.

Chapter 5

EXPERIMENTAL STUDY ON THE BIOGAS ENGINE

5.1. Study objectives

- Doing experiments on the Froude dynamometer to access the influence of biogas composition, compression ratio and advanced ignition timing angle on the outer characteristic lines of the ZH1115 engine.
- To compare and access the results given by simulation with the results given from the experiments in some cases.
- To determine the optimal basic parameters of the spark ignition biogas engines converted from diesel engines.

5.2. The experimental system

The experimental system of the ZH1115 biogas engine is showed in the Fig. 5.1. Biogas-air mixture is supplied to the engine via a venturi mixing device. The throttle valve is adjusted with an electric machine signaled by the computer.

The advanced ignition timing angle of the engine is adjusted by changing the position of the ignition timing sensor mounted on block of engine. Compression ratio of the engine can be changed by cutting off the piston head with different thickness. By this way, we can test the performance of the engine with compression ratio varried from 9 to 14.

The Froude hydraulic dynamometer is improved with electronic measurement system including the sensors of engine speeds and load (Fig. 5.1). The load sensor is standardized with a balance.

5.3. The results and comment

5.3.1. The experimental results

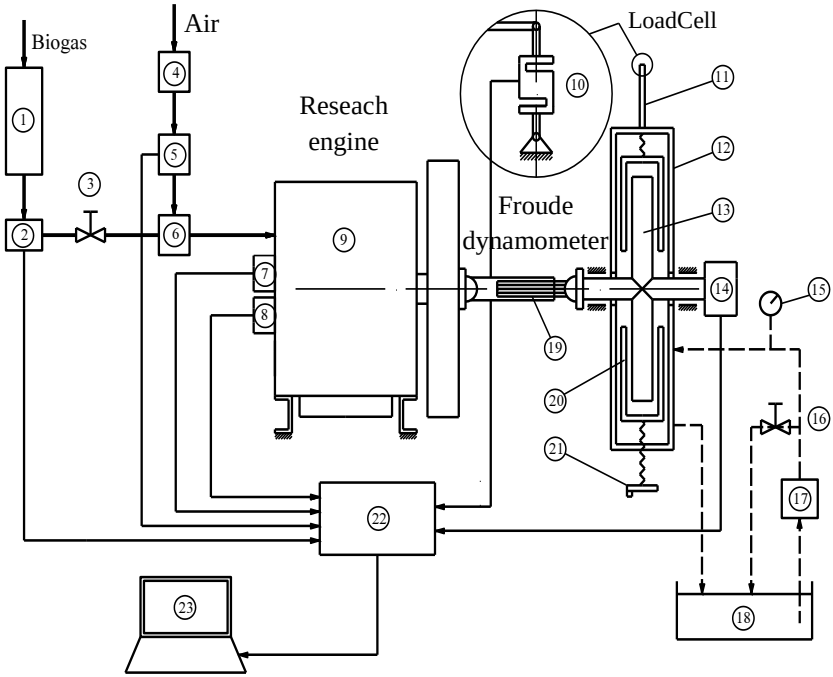

Fig. 5.1. The experimental system

1-Biogas bag; 2-Biogas flow meter; 3-Valve; 4-Air filter; 5-Air flow meter; 6-Mixer; 7-Water temp sensor; 8-Knock sensor; 9-Biogas engine; 10- Loadcell; 11-Arm; 12-Stato; 13-Roto; 14-Encoder; 15-Water pressure meter; 16-HVC; 17-Water pump; 18-Tank; 19-Cardan Shaft; 20-Plates; 21-Steering wheel; 22-Card AD NI-6009; 23-PC-LabView

The influences of the component of CH_4 in the fuel on the full load characteristic curve of the engine with the compression ratio ε=12 and the advance ignition angle φ_s=37° is presented in Fig. 5.7. At the engine speed range below 2,000rpm, this influence is not significant. The difference in the engine power approximates 10% when the component of CH_4 in biogas changes between 60% and 87%. The influences of the component of CH_4 in biogas on the maximum power becomes significant when the engine speed is above 2,000 rpm. The maximum engine power decreases by 20% when the component of CH_4 in biogas

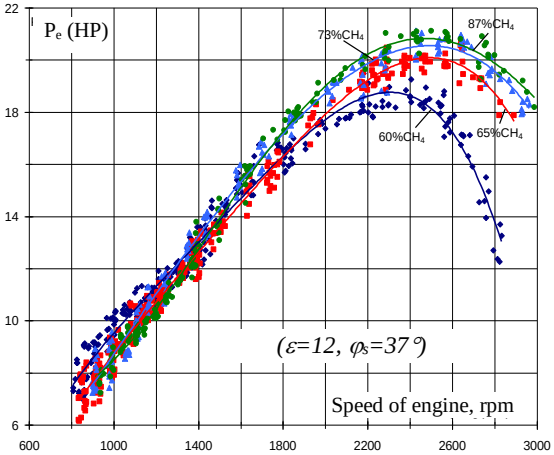

Fig. 5.1. Influences of the biogas component on the outer characteristic lines of the engine

is reduced from 87% down to 60%. And the designated speed of the engine declines with a decrease of CH_4 in biogas.

Figure 5.9 introduces the influences of the compression ratio on the full load characteristic curve. The engine compression ratios ε=10, 12, 14 are attained because the piston top is partially cut off. The engine is supplied with the biogas that contains 70% of CH_4 and with the advanced ignition timing angle in proportion to φ_s =40° BTDC.

The results present that at the range of low speed, the higher the compression ratio, the higher the engine capacity. However, at the range of high speed, compression ratio 12 gains higher capacity than these compression ratios 10 or 14 do. At the speed of 2,250 rpm, the capacity of the compression ratio engine 12 is greater about 12 percent than that of the compression ratio engine 10 or 14.

The results show that when the engine produces the maximum power at the rated speeds of 2,000 rpm and 2,400 rpm, the compression ratio ε=12 is appropriate.

The influence of the advance ignition angle on the full load characteristic curve of the biogas engine with the compression ratio

ε=12 and the fuel contains 60% of CH_4 is shown in figure 16. The advance ignition angle can be variable in an extensive range from 28° to 47°. The result shows that under these experimental conditions, the optimal advance ignition angle is 37° BTDC.

The maximum capacity variation corresponding to the advanced ignition timing angle with different speeds of engine shows that in the experimental conditions (ε=12, biogas contained 60% CH_4 in volume) the optimum spark timing angle is in the range from 34° to 42° BTDC as engine speed changes.

The maximum engine power decreases by 20% when the component of CH_4 in biogas is reduced from 87% down to 60%. And the designated speed of the engine declines with a decrease of CH_4 in biogas.

The method to raise CH_4 in biogas requires sophisticated and expensive fiteration of CO_2. On the other hand, the maximum engine power does not change much when the component of CH_4 in biogas increases. Therefore, with the normal use of locally supplied biogas, its filteration is not necessary.

Therefore, it can be said that in converting the diesel engine into the biogas spark ignition engine, the latter can retain the designated capacity when operating with poor biogas if appropriate compression ratios and the advanced ignition timing angles are adjusted.

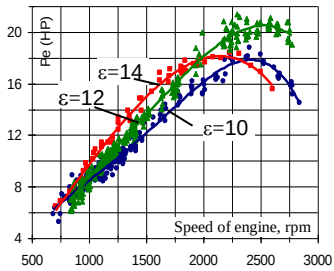

Hình 5.9. Influences of the compression ratio on the outer characteristic lines of the engine

5.3.2. Comparison between results given by simulation and experiments

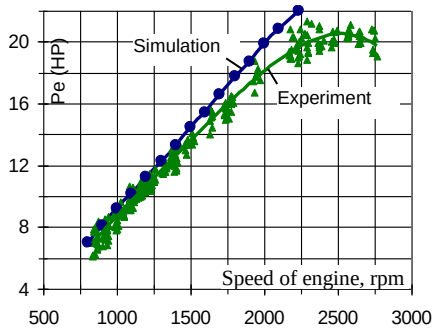

Fig. 5.18. Comparing the outer characteristic lines of the biogas engine ZH1115 given from the simulation and from the experiment

Fig. 5.18 compares the outer characteristic lines of the biogas engine ZH1115 given from the simulation and from the experiment corressponding to compression ratio of engine 10, 12 and 14 in the experimental conditions (φ_s=40°, ϕ=1,08, biogas contained 70% CH_4). The mechanical efficients of the biogas engine ZH1115 are assumed as 0.75.

The comparison shows that the variable rules of the outer characteristic lines corresponding to the compression ratios given by the simulation and by the experiment are similar.

The results of the simulation give out capacity value which is higher than that of the experiment. At the range of low speed, the difference is not big. But at the range of nominal speed, the capacity value given by the simulation is higher than that of the experiment for about 10 percent. This difference may be due to the mechanical efficients selection of unappropriate engine 0.75.

The compared results are also similar when comparing the outer characteristic lines of the biogas engine given by the simulation and by experiment corresponding to the different advanced ignition timing angles.

5.4. Conclusion

1. The simulation results fitted well with experiment data. The comparison allows us to adjust the parameters of the model and

then we can predict the performance of biogas engine running in different conditions by simulation without experimental data.

2. It can be said that in converting the diesel engine into the biogas spark ignition engine, the latter can retain the designated capacity when operating with poor biogas if appropriate compression ratios and early ignition angles are adjusted.
3. Biogas engine with compression ratio ε=12, powered by biogas containing 60% CH_4 has optimum spark timming angle in the range from 34° to 42° BTDC as engine speed changes.
4. Results of experiment and simulation studies show that in the case of biogas engines ZH1115 run at speeds of 2,200 rpm and spark timming angle of 40° BTDC, optimum compression ratio ranges is from 11.5 to 12.5.

CONCLUSION

Biogas spark ignition engine converted from diesel engine presents a lot of advantages: robust structure, high compression ratio, no need liquid fuel for operation... It is really an appropriate solution for energy saving and pollution control in our country.

In this work, ZH1115 diesel engine has been converted into biogas spark ignition engine. Diesel fuel injection system was removed and replaced by electronic ignition system. Combustion chamber of the engine was tested with two types: omega combustion chamber and plane combustion chamber. Compression ratio of the engine can be changed by cutting off the piston head with different thickness. By this way, we can test the performance of the engine with compression ratio varried from 9 to 14. Advanced ignition timing angle of the engine is adjusted by changing the position of the ignition timing sensor mounted on block of engine. Biogas-air mixture is supplied to the

engine via a venturi mixing device. Simulation of flow through mixing device allows us to determine its optimal basic size with biogas containing different concentrations of CH_4.

The experiment was carried out in the field with Froude dynamometer. Concentration of CH_4 in biogas is varried by mixing two different sources: (1) without CO_2 filtration and (2) with CO_2 filtration.

Combustion process in combustion chamber of biogas engines is simulated via the fluid dynamic software FLUENT. Comparison between results given by simulation and experiments is carried out in some cases. The comparison allows us to adjust the parameters of the model and then we can predict the performance of biogas engine running in different conditions by simulation without experimental data.

The results of the research allows us to draw the following conclusions:

1. The presence of CO_2 in biogas reduces burnning velocity of the fuel-air mixture but it makes an increasing of capacity of antidetonation. So biogas fuel should fit to low speed and high compression ratio engine. Therefore, converting diesel engine into biogas spark ignition engine is appropriate solution both in technology and economy.
2. Research methodology combined combustion simulation by software FLUENT and experimental testing on Froude dynamometer is very efficiency, it allows us to limit costs of experiements but ensure the reliability of research results.
3. In the calculation of combustion in biogas spark ignition engine converted from diesel ZH1115 engine, we can use the standard k-ε turbulence model, Partial Primixed combustion model with laminar burning speed given by empirical formula and turbulent

combustion coefficient selected by f_f=1.2. Default parameters pre-installed in FLUENT can be selected for other parameters.

4. Burning velocity of biogas-air mixture decreases with decreasing of CH_4 concentration in biogas fuel. Thus when increasing of engine speed or/and reducing of CH_4 concentration in biogas, an increasing of spark timing angle is needed to ensure optimal operation of engine. Biogas engine with compression ratio ε=12, powered by biogas containing 60% CH_4 has optimal spark timing angle in the range from 34° to 42° BTDC as engine speed changes.
5. When converting diesel engine to biogas spark ignition engine, its compression ratio should be reduced to the optimum value. In the case of biogas engines ZH1115 run at speeds of 2,200 rpm, optimum compression ratio ranges is from 11.5 to 12.5.
6. Due to burning velocity of biogas-air mixture is lower than diesel case, we should maintain turbulent movement of flow in combustion chamber for improving the efficiency of the engine. Simulation results show that indicating work of ZH1115 biogas engine with flat piston is lower than that of omega combustion chamber about 22% when running at speed of 2,200 rpm.
7. The venturi mixing device can supply stable mixture for biogas engines. When cross section of biogas supplying pipe is fixed, variation of mixture composition is not considerable with change in the throttle opening and engine speed. When CH_4 composition in biogas fuel changes, cross section of biogas supplying pipe should be changed. For ZH1115 biogas engine with original air supply pipe, the equivalent diameter of biogas supplying pipe can be represented by the expression $D(mm)=166.X^{-0,5443}$, where X is the percentage (%) of CH_4 in biogas by volume.

PUBLISHED WORKS OF AUTHOR

1. Bui Van Ga, Le Minh Tien, Le Xuan Thach (2010), "Comparisons of effectiveness of different solutions of biogas supplying for internal combustion engines", *Journal of science and technology, university of Danang*, No. 2(37)/2010, pp.65-72.
2. Bui Van Ga, Tran Van Nam, Le Xuan Thach (2011), "Simulation of flow in mixing device of biogas spark ignition engine by fluent code", *Journal of science & technology technical universities*, No. 80/2011, pp. 134-138.
3. Tran Van Nam, Bui Van Ga, Le Xuan Thach, Pham Dinh Long (2012), "Determination of Optimal Structural and Operational Parameters of Biogas Spark Ignition Engine", *The Nationwide Conference on Pneumatic Mechanical*, Nhatrang City, Vietnam, 26-28/7, pp. 505-516.
4. Bui Van Ga, Tran Thanh Hai Tung, Tran Van Nam, Le Xuan Thach, Le Minh Tien (2012), Experimental Study of Effect of Compression Ratio and Biogas Composition on Biogas Spark Ignition Engine, *The 2nd International Conference on Automotive Technology, Engine and Alternative Fuels*, Hochiminh City, Vietnam, December 4-5, pp. 129-135.
5. Bui Van Ga, Tran Thanh Hai Tung, Le Xuan Thach (2013), "Appropriate combustion chamber for biogas SI engine", *Journal of science and technology, university of Danang*, No. 3(64)/2013, pp. 37-43.
6. Bui Van Ga, Tran Van Nam, Le Minh Tien, Le Xuan Thach (2013), "Influence of CH_4 Component, Advanced Ignition Angle and Compression Ratio to Biogas Engine Features", *The transport journal*, Vietnam, No. 5/2013, pp. 7-13.
7. Bui Van Ga, Tran Van Nam, Duong Viet Dung, Le Xuan Thach (2013), "Comparison of Simulation and Experiment of Effects of Advanced Ignition Angle to Performance of Biogas Engine", *The transport journal*, Vietnam, No. 6/2013, pp. 9,10,42.